Support Vector Regression Assisted Auxiliary Particle Filter based Remaining Useful Life Estimation of GaN FET

Moinul Shahidul Haque
Dept. of Electrical and Computer Engineering,
Mississippi State University,
Starkville, MS, USA
mh3273@msstate.edu

Seungdeog Choi
Dept. of Electrical and Computer Engineering,
Mississippi State University,
Starkville, MS, USA
s.choi@msstate.edu

***Abstract*— Reliability of Gallium Nitride (GaN) power semiconductor transistors are extremely important to uncover its immense possibility in high power conversion applications. Accurate remaining useful life (RUL) estimation ensures robust operational reliability of GaN FET in high power applications. Fault precursor trajectory based RUL estimation methods results in large estimation error due to both hybrid tendency of the trajectories and presence of measurement noise. Tracking and projecting fault precursor trajectory for RUL estimation is another crucial challenge when the system condition changes suddenly. In this paper, an epsilon support vector regression (ε-SVR) aided auxiliary particle filter (APF) is applied for RUL estimation of GaN field-effect transistor (FET). On-state resistance ($R_{DS,ON}$) is used as the fault precursor for this study. $R_{DS,ON}$ of GaN FETs show dynamic characteristics during switching operation and results in false alarm in degradation identification. However, Steady state $R_{DS,ON}$ shows strong relationship with degradation. In this paper, a signal conditioning circuit is used to acquire $R_{DS,ON}$ with proper resolution. ε-SVR-assisted-APF also accurately estimates the RUL when operating condition changes suddenly. The failure region of GaN FET is modeled which shows the failure probability after $R_{DS,ON}$ reaches the threshold value. The effectiveness of ε-SVR-assisted-APF is validated using accelerated ageing data under power cycling test.**

***Index Terms*— Gallium Nitride High-Electron Mobility Transistors, Support Vector Machine, Remaining Useful Life Estimation, Auxiliary Particle Filter, Fault modeling.**

I. INTRODUCTION

WIDE band gap devices such as Gallium Nitride (GaN) power semiconductor field-effect transistors(FETs) are showing potential for high power high frequency energy conversion applications. They exhibit higher breakdown voltage, current handling capability and compact size compared to silicon (Si) based FETs [1], [2]. In past, cost of these FETs are high and impede their adaptation in power electronics applications. However, reduced cost GaN FETs are fabricated on Si wafer. Moreover, their low conduction loss and switching loss make them ideal candidate for high frequency and high power applications. Limited researches have been conducted on reliability of GaN FETs in high power applications till to date. The reliability of GaN transistor is extremely important issue for its adaptation in mission critical applications. Unexpected failure in these transistors will lead to costly shutdown. Accurate health monitoring and remaining useful life (RUL) estimation of this transistor ensures timely scheduling and smooth operation.

Generally, semiconductor devices show a degradation pattern over its life. They degrade at a slower rate early in their life time and degrade at an exponential rate at the end of their lifetime and result in sudden failure [3], [4]. For this reason, prediction of health and estimation of fault time is important for reliable operation of the overall system. Prognosis study monitors health of the switch continuously based fault precursors and estimate remaining useful life (RUL) for scheduling timely maintenance. Effectiveness of prognosis study depends on the fault precursor identification which show sufficient sensitivity to degradation over time. These precursors are traced and projected for RUL estimation. Gate source threshold voltage ($V_{GE,th}$), gate leakage current, drain current and on-state resistance ($R_{DS,ON}$) have been identified as fault precursor for GaN FETs till to date [5]-[9]. $V_{GE,th}$ shows insignificant change with defects creation and propagation. It also shows insignificant sensitivity to temperature [5]-[7]. Gate leakage current is dependent on electric field and shows less sensitivity to junction temperature variation. This parameter is weakly correlated with hot electron degradation as it is mainly dominated by tunneling injection of electron [7], [8]. In addition, measurement of these two parameters is offline and need additional circuitry. Although online measurement of drain current is possible, it shows strong relationship with load and insignificant sensitivity to degradation [8]-[10]. $R_{DS,ON}$ shows sensitivity to device degradation.

978-1-5090-6684-1/18/$31.00 ©2018 IEEE

Authorized licensed use limited to: Access provided by VTU consortium. Downloaded on March 21,2026 at 18:13:43 UTC from IEEE Xplore. Restrictions apply.

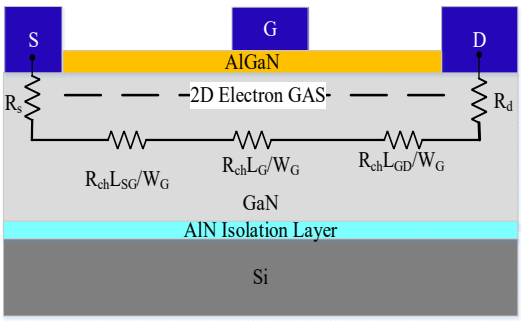

Fig. 1. Internal structure of GaN FET

Online measurement of this parameter faces practical challenges due to the device structure and its material properties. Proper signal conditioning is necessary to formulate a prognosis study based on this precursor. Compared to other precursors, this precursor's online acquisition method requires minimum circuits. In this paper, $R_{DS,ON}$ is used as a fault precursor for RUL estimation and proper signal conditioning is performed to capture its sensitivity to degradation.

The basis of RUL study is to estimate the time required for the fault precursor to reach the threshold value. Accurate projection of fault precursor trajectory ensures precise RUL estimation. RUL estimation of IGBT and Si MOSFET utilize different trajectory tracing techniques [10]-[14]. Large RUL estimation variation is experienced in these studies as trajectories show linear and non-linear tendencies. Moreover, there is measurement noise present in acquired data which also contribute to large estimation error. For this reason, RUL estimation and maintenance scheduling experience false positive and false negative error. These errors result in unexpected and costly shutdown of mission critical system. This $R_{DS,ON}$ trajectory shows a mixture of linear and nonlinear tendencies. Different Bayesian trajectory tracing methods such as Kalman Filtering (KF), particle filtering (PF) methods are applied for accurate life time estimation. KF methods show satisfactory performance when trajectory is linear. However, it is not able to trace the trajectory when trajectory shows hybrid tendencies. PF methods shows better performance compared to PF methods when trajectories are hybrid. PF methods suffer from particle degeneracy which results in loss of processing power and RUL estimation error. In addition, sudden change in operating condition also affect RUL estimation. These Bayesian techniques fail to address the dynamics of the fault precursor trajectory. In this paper, adaptive epsilon support vector regression (ε-SVR) aided auxiliary particle filter (APF) is applied for accurate tracing of hybrid trajectory of $R_{DS,ON}$ and RUL estimation. SVR models the dynamics of $R_{DS,ON}$ trajectory based on similarity of measured $R_{DS,ON}$. In addition, this method estimates importance density. APF method introduces an additional variable which increases the dimensionality of the data which helps for significant measurement noise reduction. If there is an abrupt change in the trajectory due to change in operating conditions, this hybrid method can trace the trajectory which SVR and PF methods alone fails to trace. As a result, this proposed method is robust RUL estimator even in the case of sudden system parameter change and measurement noise. This paper is logically organized as follows: Section II discusses the structure and failure mechanism of GaN FET. Support vector regression assisted auxiliary particle filtering based RUL estimation is discussed in Section III. Failure modeling is provided in section IV followed by experimental verification and conclusion.

II. STRUCTURE AND FAILURE MECHANISMS OF GAN FET

Internal structure of a GaN FET is shown in Fig.1. Low cost GaN FET is fabricated on Si layer. On top of Si body, thin AlN isolation layer, GaN layer and AlGaN layer are stacked respectively. Potential well is formed at the junction of GaN and AlGaN layers due to the difference in their band gap. In these potential wells electrons are trapped to form a high density electron layer known as two dimensional electron gas (2DEG). These electrons are free from with any atoms. As a result, their resistivity is lower. Due to this property, GaN FETs have lower $R_{DS,ON}$ compared to Si switches. Cascode Gallium Nitride (GaN) FET has a normally-off low voltage Silicon (Si) MOSFET and a normally-on high voltage GaN High Electron Mobility Transistor (HEMT). In a GaN FET, these two switches operate as a single FET switch.

$R_{DS,ON}$ of GaN FET is divided as bias independent series contact resistance and channel resistance. $R_{DS,ON}$ is modeled as follows:

$$R_{DS,ON} = R_{se} + \left[\left(L_{SG} + L_G + L_{GD}\right) / W_G\right] R_{ch} \tag{1}$$

where, R_{se} is the series contact resistance and R_{ch} is the contact less channel resistance; L_{SG}, L_G, L_{GD} are the source-gate, gate and gate-drain length, respectively and W_G is the gate width. For horizontal GaN FETs, contact resistance does not show significant sensitivity to material degradation. However, channel resistance is a function of current through the channel and depth of cracks. As R_{se} is insignificant, (1) can be written as follows:

$$R_{DS,ON} = \left[\left(L_{SG} + L_G + L_{GD}\right) / W_G\right] R_{ch} \tag{2}$$

Channel resistance of GaN FET is dominated by trapping effect. Electrons are trapped in the surface close to the gate when the FET is biased. Trapping of electrons in buffer layer is result of large electrical field in drain [16], [17]. These trapped electrons results in increasing $R_{DS,ON}$ during switching of the FET as shown in Fig.2. When FET is off, the trapping of electrons is the function of biasing time and off-state drain to source voltage ($V_{DS,off}$). When the FET is on-state, electrons are detrapped from these layers. $R_{DS,ON}$ is also dependent on the number and depth of cracks formed at the junction GaN and AlGaN. During on-state, more electrons are trapped in these cracks which also results in $R_{DS,ON}$ increment. Therefore, increase in $R_{DS,ON}$ due to degradation is the resultant of these two processes. During on state, $R_{DS,ON}$ decreases and converge to its static value. Convergence time depends on the electron de-trapping time constant.

During its operation, GaN FETs experience thermos-mechanical stresses which results in device degradation. In GaN FET, hot electron and inverse piezoelectric effects are dominant

Authorized licensed use limited to: Access provided by VTU consortium. Downloaded on March 21,2026 at 18:13:43 UTC from IEEE Xplore. Restrictions apply.

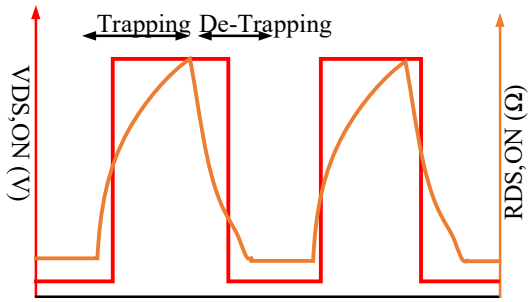

Fig. 2. On-state resistance of GaN FET.

mechanisms for defect creation and surface breakdown. When high electric field is applied across the FET, electrons in 2DEG gain very high velocity. These high velocity electrons hit the surface and result in defect formation both in AlGaN layer and the buffer region [8, 9]. Significant tensile strain is present as the junction of AlGaN and GaN due to lattice mismatch between these layers.

This strain results in crystallographic defect formation. Under high electric field, this stress increases significantly and accelerates crack formation process [10-11]. These crack formation and crack deepening process are irreversible. For this reason, static $R_{DS,ON}$ increases monotonously. Again, the FET is constructed with material with different coefficient of thermal expansion (CTE). Due to these different CTE, joints of different layers and connection between wire-bond and soldering experience mechanical stress which results in cracks at these joints and breakdown of the wire-bonds. Due to these mechanisms, current carrying capability of FET is reduced and may result in open circuit fault.

$R_{DS,ON}$ is also function of junction temperature(T_J). Acquired $R_{DS,ON}$ needs to be scaled according to T_J. In this paper, trajectory of $R_{DS,ON}$ is traced and projected for accurate RUL estimation. Proper signal conditioning mechanism in used in processing of $R_{DS,ON}$. The conditioning circuitry and processing mechanism in described in Section IV.

III. SUPPORT VECTOR REGRESSION ASSISTED AUXILIARY PARTICLE FILTER BASED REMAINING USEFUL LIFE ESTIMATION

There are two challenges in accurate RUL estimation- measurements of $R_{DS,ON}$ are noisy due to measurement inaccuracy and noise present in the system and nature of the tendency of trajectory. $R_{DS,ON}$ shows linear and non-linear tendency during its life cycle. These hybrid tendencies are difficult to predict and project which is essential step in RUL estimation. In this paper, an epsilon-support vector regression (SVR) aided auxiliary particle filter(APF) based RUL estimation is applied shown in Fig.3.

In SVR, $R_{DS,ON}$ trajectories are used to model trajectory and predict $R_{DS,ON}$ a future time. In this regression method, data points are divided into small groups and similarity between these points are estimated. If insignificant similarity is found in the dataset, this dataset is subdivided into more smaller dataset. Epsilon loss function is used so that the size of dataset is optimized and best possible regression line is chosen based on global minima. The SVR model is expressed as follows:

$$R_{pre} = cR_{mea} + b \tag{3}$$

where R_{mea} is $kx1$ vector containing $R_{DS,ON}$ for last k samples, c is the d x k transformation matrix which maps data into different dimension to transform non-linearity into linear case and R_{pre} is the prediction matrix which contains d number of prediction of $R_{DS,ON}$. If the data is following a linear tendency, w becomes a k x k matrix. The epsilon loss function is defined as follows:

$$L\left(R_{mea}, R_{pre}\right) = \begin{matrix} 0 if \left|R_{mea} - R_{pre}\right| \le \varepsilon \\ \left(\left|R_{mea} - R_{pre}\right| - \varepsilon\right) otherwise \end{matrix} \tag{4}$$

where, L is the loss function, ε is allowable error between measurement and predicted $R_{DS,ON}$ at time k. This loss function penalizes the errors exceeding ε. In each iteration of SVR, the time FET will take to reach the threshold value is estimated.

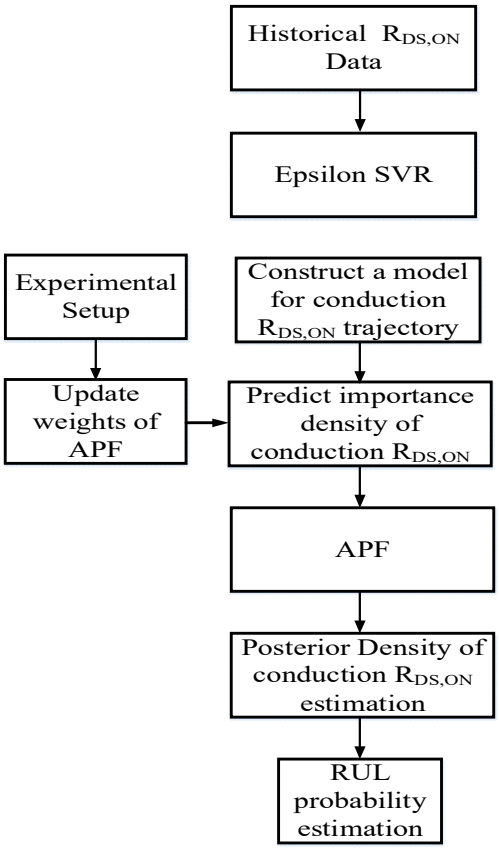

Fig. 3. SVR-assisted APF based RUL estimation method.

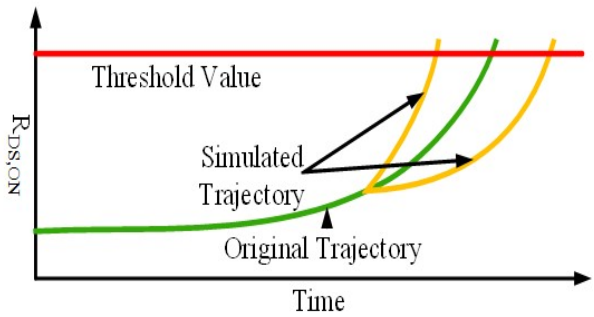

Fig. 4. RUL estimation of GaN FET.

Authorized licensed use limited to: Access provided by VTU consortium. Downloaded on March 21,2026 at 18:13:43 UTC from IEEE Xplore. Restrictions apply.

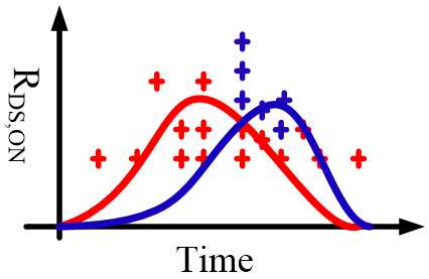

Fig. 5. Failure modeling of GaN FET.

The RUL estimation by SVR is erroneous due to the presence of noise. APF method is used to reduce the effect of measurement noise. A generic particle filter (GPF) takes sample from importance density and predicts the future density from these samples. As GPF takes samples uniformly from the entire distribution, the estimation is biased. To remove this biasness, the particle index is used as an additional variable which transform the dimensionality of the distribution and reduce the effect of noise. In APF, samples are only taken from high density region. The state model and measurement model for APF are as follows:

$$x_k = x_{k-1} + v_k \tag{5}$$

$$R_{DS,ON,MEA} = f(x_k) + m_k \tag{6}$$

where, x_k is a 2x1 state vector contains the scale and shape parameter of the importance density at time k, v_k is the transition noise and $R_{DS,ON,MEA}$ is the measured $R_{DS,ON}$. State model is updated based on the Bayes theorem as follows:

$$p(x_k \mid R_{DS,ON,MEA_{1:k}}) = \frac{P(R_{DS,ON_k} \mid x_k)\, p(x_k \mid R_{DS,ON_{1:k-1}})}{p(R_{DS,ON_k} \mid R_{DS,ON_{1:k-1}})} \tag{7}$$

This model is updated based Monte Carlo Simulations until it reaches $R_{DS,ON,threshold}$. This APF model is used recursively to estimate RUL as shown in Fig.4. as follows:

$$RUL_n = n_f - n \tag{8}$$

where, RUL_n is the RUL estimated at time n, n_f is the time to reach the critical value of the fault precursor from the present time n. SVR assisted APF method is shown in Fig.3.

IV. Failure Modeling of GaN FET

For RUL estimation purpose, The FET is assumed faulty when $R_{DS,ON}$ reaches threshold value. The threshold considered in this paper is the value when $\Delta R_{DS,ON}$ exceeds 10% of its initial value. This is an IEC60747-9-2007 standard for Si based semiconductors. However, the switch does not fail immediately after reaching threshold. It enters a region of uncertainty and fails following a failure distribution. This distribution provides the urgency of scheduling maintenance before FET failure. $R_{DS,ON}$ in failure region is defined as ($R_{DS,ON,Threshold}$,α] where, $R_{DS,ON,Threshold}$ is the lower bound of this region. The upper bound is $R_{DS,ON}$ at or before failure, $R_{DS,ON,failure}$ and the lower bound of the distribution is considered constant for this study. The probability distribution of $R_{DS,ON,failure}$ is defined as follows:

$$f\left(R_{DS,ON,failure}\right) = f\left(k, \alpha, \lambda\right) \tag{9}$$

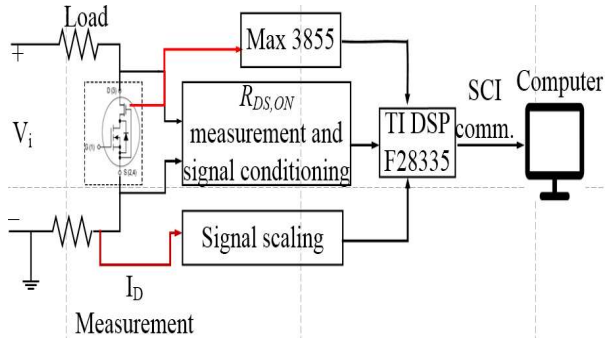

Fig.6. Block diagram of power cycling test.

where, k is the shape parameter, λ is the scale parameter and α is the rate parameter of the distribution. These parameter are dependent on the data. These parameters are updated when new $R_{DS,ON,failure}$ is available. In this paper, the distribution is assumed as a normal distribution, $f(R_{DS,ON,failure}) \sim N(\mu, \sigma^2)$ where μ is the mean and σ^2 is the variance. The prior distribution of μ is $N(\mu_o, \sigma_o^2)$. When new $R_{DS,ON,failure}$ is available, the distribution is updated as follows:

$$f(\mu \mid R_{DS,ON,failure}) = \frac{1}{\sqrt{2\Pi\sigma_1^2}} \exp\left[\frac{-(\mu-\mu_1)^2}{2\sigma_1^2}\right] = N(\mu_1, \sigma_1^2) \tag{10}$$

In (10), $f(R_{DS,ON})$ is a constant which implies that $f(\mu|R_{DS,ON,Failure})$ is proportional to the product of $f(\mu)$ and $f(R_{DS,ON,Failure}|\mu)$. The updated posterior distribution is as follows:

$$f(\mu \mid R_{DS,ON,failure}) = \frac{1}{\sqrt{2\Pi\sigma_1^2}} \exp\left[\frac{-(\mu-\mu_1)^2}{2\sigma_1^2}\right] = N(\mu_1, \sigma_1^2) \tag{11}$$

where, μ_1 is the updated mean and σ_1^2 is the updated variance. The value of updated mean and variance is estimated as follows:

$$\frac{1}{\sigma_1^2} = \frac{1}{\sigma^2} + \frac{1}{\sigma_o^2} \tag{12}$$

$$\frac{\mu_1}{\sigma_1^2} = \frac{R_{DS,ON,failure}}{\sigma^2} + \frac{\mu_0}{\sigma_o^2} \tag{13}$$

The failure region modeling is shown in Fig. 5. The red points are previous failure point of GaN FET. Based on these points a distribution is formulated shown in red line. When new failure data is available shown in blue points, the parameters of the distribution is changed. New distribution is shown in blue color.

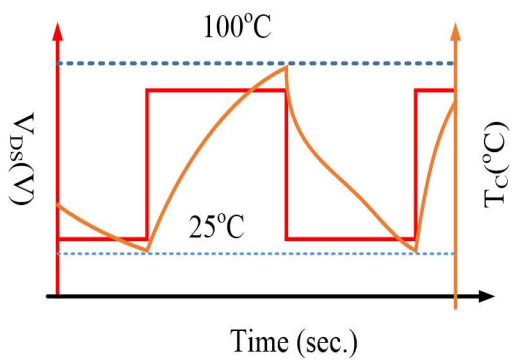

Fig.7. Temperature variation during power cycling test.

Authorized licensed use limited to: Access provided by VTU consortium. Downloaded on March 21,2026 at 18:13:43 UTC from IEEE Xplore. Restrictions apply.

V.

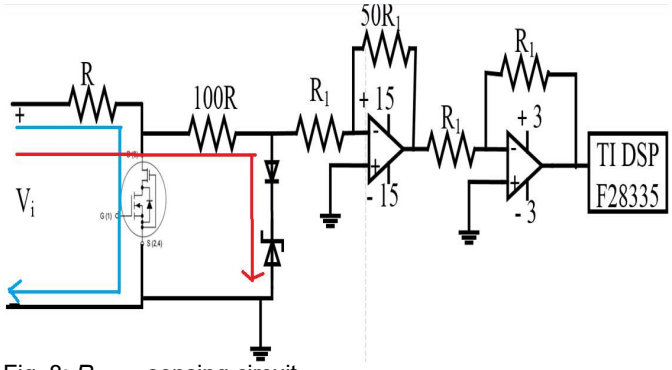

Fig. 8: $R_{DS,ON}$ sensing circuit.

VI. EXPERIMENTAL VERIFICATION

A. Experimental set up

Constant power-temperature variation power-cycling testing set up is shown in Fig. 6. The device under test (DUT) is a N-Channel 600V/9A TO-220-3 GaN FET. The tests are conducted at 30 V 5 A with 10V gate voltage. The case temperature (T_C) of the FET is allowed to vary from 25°C to 100 °C as shown in Fig. 7. T_C is measured with a K-type thermocouple and the output of the thermocouple is conditioned with MAX31855 which is read by TI DSP F28335. F28335 controls temperature cycling of the DUT based on T_C. When T_C reaches 100°C, DUT is turned off and cooled down to 25°C. At 25°C, the FET is on with 100% duty cycle. The FET is switching at the same frequency of temperature cycle. Heat sink of DUT is fan cooled. At this temperature, DUT is again turned on by F28335. The challenge of accelerated life testing of semiconductor switch is to precise and high precision precursor data acquisition. In this setup, a $R_{DS,ON}$ measurement set up is built as shown in Fig.8.

A.1. $R_{DS,ON}$ Measurement set up

F28335 has a 12 bit ADC which has resolution of .7mV/bit. If these ADCs are used across drain and source of the GaN FET, drain to source voltage ($V_{DS,OFF}$) across DUT reaches 30 V during off-state which would damage the ADCs. During on-state, $V_{DS,ON}$ is in mV range which is very insignificant compared to $V_{DS,OFF}$. For this reason, $V_{DS,OFF}$ should be scaled while amplify $V_{DS,ON}$ at the same time. On-state voltage need amplification to reflect the minuscule change in $V_{DS,ON}$. A signal-condition circuit is used to address these issues as shown in Fig.8. When the DUT is off, the current will follow the path shown in red-color. $V_{DS,OFF}$ is limited by across diode (D_1) and Zener diode (D_{Z1}) will limit to $V_{D1.on}$+ V_{DZ2} as seen by ADC ports. When DUT is on, Current will flow through the blue line in Fig. 8. During this on time, D1 and D_{Z1} will be open and $V_{DS,ON}$ appears across these switches. These voltages are amplified and limited by two amplifier stages so that maximum voltage seen by ADCs are limited to 3V. I_D is sensed using a shunt resistor and transmitted to computer using serial communication interface for processing and storage.

$R_{DS,ON}$ converges to its static value with time and this convergence time depends on the biasing voltage and off-state voltage. The FET is effectively switching at the frequency of temperature variation. Data acquisition starts after 100μs after the DUT is turn on to allow the FET to converge to its static value. The $R_{DS,ON}$ at different temperature cycle is compared at same acquisition temperature to nullify the effect of temperature on $R_{DS,ON}$ variation. For this reason, acquisition of $R_{DS,ON}$ and T_C is synchronized.

B. Experimental Results

Power Cycling test has been conducted on 16 GaN FETs. 12 GaN FETs have been used for training and 4 GaN FET have been used for verification. Power Cycling tests have been conducted till DUts have failed.

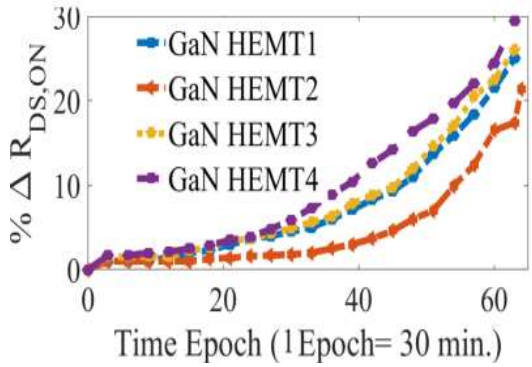

Fig. 9. Trajectory of $R_{DS,ON}$ for different GaN FETs.

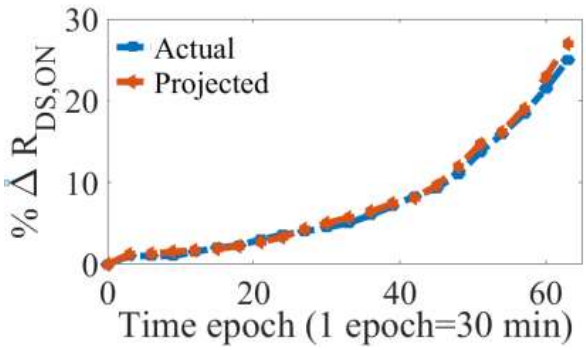

Fig. 10. Predicted and actual trajectory of $R_{DS,ON}$

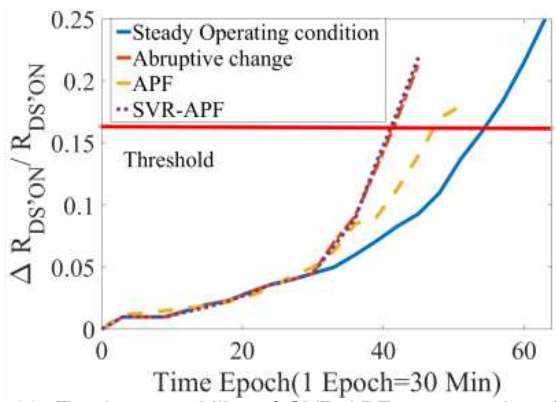

Fig. 11. Tracing capability of SVR-APF compared to SVR when operating condition changes abruptly.

Authorized licensed use limited to: Access provided by VTU consortium. Downloaded on March 21,2026 at 18:13:43 UTC from IEEE Xplore. Restrictions apply.

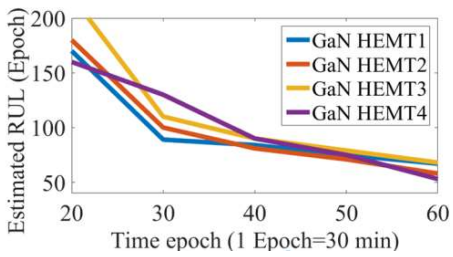

Fig. 12. Estimated RUL of GaN FET using SVR-assisted APF.

Trajectory of $R_{DS,ON}$ of different GaN FETs have been shown in Fig. 9 under aforementioned operating condition. These trajectories shows mixed tendencies over its life time. The trajectory has three stages- in its healthy state, $R_{DS,ON}$ remains almost constant. After that, GaN FET shows first sign of degradation and $R_{DS,ON}$ changes constantly. At the end of itslife time, $R_{DS,ON}$ changes expoenetially. The GaN FET is considered faulty when change in $R_{DS,ON}$ reaches 10% of its initial value. To have a consistency, datasheet value is selected as initial value for all the DUTs. Fig. 10 shows that prediction and tracing capability of the propsed algorithm. When operating condition of the test have been changed, proposed algorithm have shown the ability for closely follow the changed trajectory compared to APF as shown in Fig.11. Fig. 12 shows the estimated RUL for different GaN FETs for the proposed algorithm.

VII. CONCLUSION

Reliability of GaN FET is the major challenge in high-frequency high power converter applications. RUL estimation of semiconductor switch suffers from significant estimation error when subject to sudden change in operating condition. Moreover, hybrid nature of the trajectory and measurement noise also affects RUL estimation. In this paper, a SVR aided APF based RUL estimation method for GaN switch is proposed to address these issues and reduce estimation error significantly. This hybrid method overcomes the shortcoming of Bayesian estimation method by addressing the dynamics of the trajectory due to sudden change in system conditions. This method is able to estimate RUL with error range (7%-11%). Moreover, fault zone is also modeled which quantifies the failure of GaN FET after exceeding the threshold value.

REFERENCES

[1] G. Meneghesso et al., "Reliability of GaN high-electron-mobility transistors: State of the art and perspectives," *IEEE Trans. Device Mater. Rel.*, vol. 8, no. 2, pp. 332–343, Jun. 2008.

[2] S. Yang, D. Xiang, A. Bryant, P. Mawby, L. Ran, and P. Tavner, "Condition Monitoring for Device Reliability in Power Electronic Converters: A Review," *IEEE Trans on Power Electron*., vol. 25, no. 11, pp. 2734-2752, Nov. 2010.

[3] S. Vitanov et al., "Physics-Based Modeling of GaN HEMTs," *IEEE Transactions on Electron Devices*, vol. 59, no. 3, pp. 685-693, March 2012.

[4] I. Rossetto *et al*., "Time-Dependent Failure of GaN-on-Si Power HEMTs With p-GaN Gate," *IEEE Transactions on Electron Devices*, vol. 63, no. 6, pp. 2334-2339, June 2016.

[5] M. Meneghini *et al*., "Trapping and Reliability Assessment in D-Mode GaN-Based MIS-HEMTs for Power Applications," *IEEE Transactions on Power Electronics*, vol. 29, no. 5, pp. 2199-2207, May 2014.

[6] W. Saito et al., "On-Resistance Modulation of High Voltage GaN HEMT on Sapphire Substrate Under High Applied Voltage," *IEEE Electron Device Letters*, vol. 28, no. 8, pp. 676-678, Aug. 2007.

[7] N. Badawi, O. Hilt, E. Behat-Treidel, J. Böcker, J. Würfl, and S. Dieckerhoff, "Investigation of The Dynamic On-State Resistance of 600V Normally-Off And Normally-On GaN HEMTs," *IEEE Energy Conversion Congress and Exposition,* pp. 913-919, 2015.

[8] W. Saito *et al*., "On-Resistance Modulation of High Voltage GaN HEMT on Sapphire Substrate Under High Applied Voltage," *IEEE Electron Device Letters*, vol. 28, no. 8, pp. 676-678, Aug. 2007.[10]

[9] A. K. Sahoo, N. K. Subramani, J. C. Nallatamby, N. Rolland, R. Quere and F. Medjdoub, "Temperature dependent contact and channel sheet resistance extraction of GaN HEMT," *Integrated Nonlinear Microwave and Millimetre-wave Circuits Workshop*, Taormina, pp. 1-3, 2015.

[10] D. Jin and J. A. del Alamo, "Methodology for the Study of Dynamic ON-Resistance in High-Voltage GaN Field-Effect Transistors," *IEEE Transactions on Electron Devices*, vol. 60, no. 10, pp. 3190-3196, Oct. 2013.

[11] A. Lidow, J. Strydom, M. de Rooij, and D. Reusch, "GaN Transistors for Efficient Power Conversion", *2nd Edition, John Wiley and Sons*, 2015.

Authorized licensed use limited to: Access provided by VTU consortium. Downloaded on March 21,2026 at 18:13:43 UTC from IEEE Xplore. Restrictions apply.